Surname	Centre Number	Candidate Number
Other Names		2

GCE A level

1324/01

S15-1324-01

PHYSICS – PH4

Oscillations and Fields

A.M. THURSDAY, 11 June 2015

1 hour 30 minutes

For Examiner's use only		
Question	**Maximum Mark**	**Mark Awarded**
1.	**13**	
2.	**15**	
3.	**11**	
4.	**13**	
5.	**9**	
6.	**9**	
7.	**10**	
Total	**80**	

1324 010001

ADDITIONAL MATERIALS

In addition to this examination paper, you will require a calculator and a **Data Booklet**.

INSTRUCTIONS TO CANDIDATES

Use black ink or black ball-point pen.

Write your name, centre number and candidate number in the spaces at the top of this page.

Answer **all** questions.

Write your answers in the spaces provided in this booklet.

INFORMATION FOR CANDIDATES

The total number of marks available for this paper is 80.

The number of marks is given in brackets at the end of each question or part question.

You are reminded of the necessity for good English and orderly presentation in your answers.

You are reminded to show all working. Credit is given for correct working even when the final answer given is incorrect.

© WJEC CBAC Ltd.

Examiner only

Answer **all** *questions*.

1. *(a)* Oxygen gas is held in a sealed container.

(i) Explain in clear steps, using the kinetic theory and Newton's laws of motion, how the oxygen exerts pressure on the walls of the container. [4]

.....

.....

.....

.....

.....

.....

.....

.....

.....

.....

.....

.....

(ii) If the gas behaves as an ideal gas then:

$$pV = \frac{1}{3}Nm\overline{c^2}$$

State the meaning of each of the terms: [3]

(I) N .....

(II) m .....

(III) $\overline{c^2}$ .....

© WJEC CBAC Ltd.

Examiner only

(b) A container of volume $0.7\,m^3$ holds oxygen gas at a pressure of 4.0×10^5 Pa and a temperature of 288 K. (Relative molecular mass of oxygen gas = 32.)

Calculate:

(i) the number of moles of oxygen gas in the container; [2]

.....

.....

.....

(ii) the rms speed of the molecules. [3]

.....

.....

.....

.....

(c) In practice oxygen is not an ideal gas. Give one reason for this. [1]

.....

.....

.....

.....

1324 010003

Examiner only

2. A cork, **P**, floats on the surface of a pond. When a wave travels over the surface the cork oscillates vertically with Simple Harmonic Motion (SHM). The cork completes 20 oscillations in 24 s and has a total vertical range of 1.6 cm.

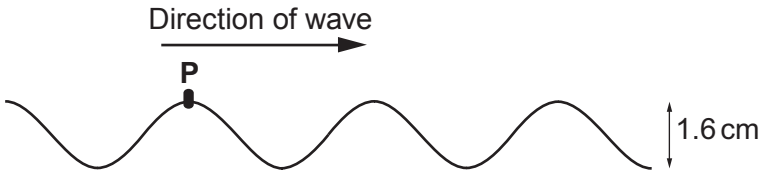

(a) Define *Simple Harmonic Motion.* [2]

.....

.....

.....

(b) Calculate the period of oscillation. [1]

.....

.....

(c) Show that the angular velocity, ω, of oscillation is approximately 5 rad s^{-1}. [2]

.....

.....

.....

(d) If the cork is at its highest point when t = 0, complete the expression for the upward displacement of the cork, x, by inserting numerical values into the boxes. [3]

$$x = \square \sin\left(\square\, t + \square\right) \text{ cm}$$

© WJEC CBAC Ltd.

Examiner only

(e) Determine the time it takes for the cork to move directly downward from 0.4 cm above the centre of oscillation to 0.3 cm below the centre. [3]

.....

.....

.....

.....

.....

(f) A second cork, **Q**, also oscillates on the surface at a **quarter of a wavelength** from **P** as shown in the diagram.

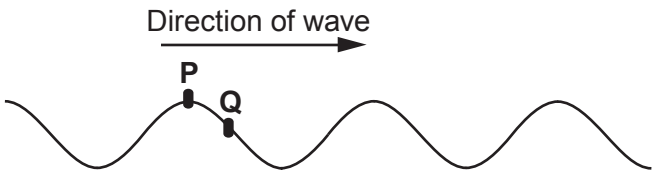

Sketch the vertical displacements of the two corks during the time interval $t = 0$ to $t = 2.4$ s. Use the same axes for both curves and label both curves clearly for cork **P** and cork **Q**. [3]

(g) Hence write an expression for the upward displacement of cork **Q** in terms of t. [1]

.....

.....

© WJEC CBAC Ltd.

Examiner only

3. A heat engine has a cylinder with a leak-proof moveable piston which contains 2.00 mol of ideal monatomic gas. The gas is taken around the 4-stage cycle **A→B→C→D→A** as shown in the diagram.

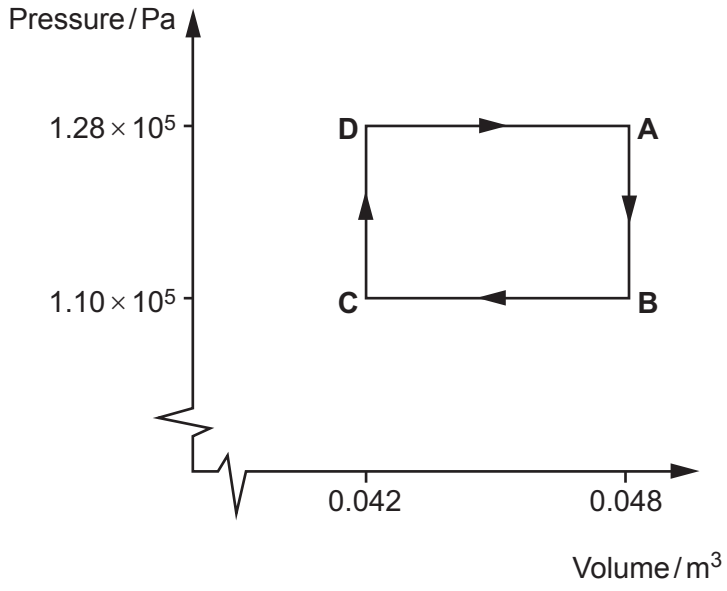

(a) Complete the table indicating the temperature and internal energy of the gas in state **C**. [2]

State	Temperature T / K	Internal energy U / J
A	369.7	9217
B	317.7	7920
C		
D	323.5	8065

Space for calculations.

© WJEC CBAC Ltd.

Examiner only

(b) Determine the work done *(W)* **by** the gas for each of the following: [4]

(i) **A→B**;

.....

(ii) **B→C**;

.....

(iii) **C→D**;

.....

(iv) **D→A**;

.....

(v) **A→B→C→D→A** (net work done by the gas during the whole cycle).

.....

(c) Determine the stages of the cycle in which heat is **absorbed by** (supplied to) the gas. Show that the total heat absorbed in these stages is approximately 3 000 J. *(Hint: Use the first law of thermodynamics for each stage.)* [3]

.....

.....

.....

.....

.....

.....

(d) A heat engine absorbs heat and does work. The efficiency of a heat engine is given by:

$$\text{efficiency} = \left(\frac{\textbf{net}\text{ work done }\textbf{by}\text{ the engine}}{\text{heat }\textbf{absorbed}\text{ by the engine}}\right) \times 100\%$$

Calculate the efficiency of the gas heat engine. [2]

.....

.....

.....

.....

1324 010007

© WJEC CBAC Ltd.

Examiner only

4. *(a)* Two discs, **A** and **B**, on a frictionless air table collide head-on. Disc **A** has a mass of 0.36 kg and disc **B** a mass of 0.18 kg. Before colliding, disc **A** has a velocity of $0.40\,m\,s^{-1}$ and disc **B** a velocity of $0.10\,m\,s^{-1}$ in the opposite direction. On colliding they stick together.

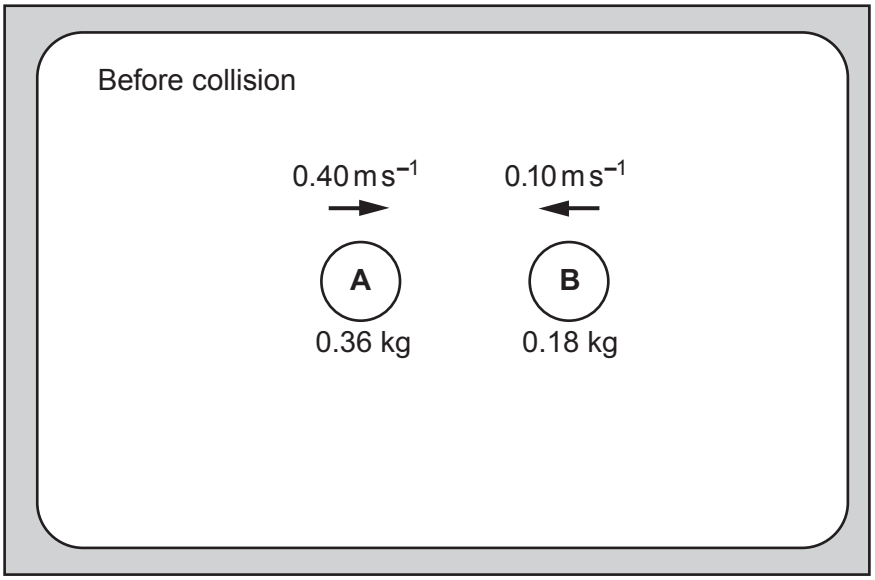

Calculate:

(i) the velocity of the discs after the collision; [3]

.....

.....

.....

.....

.....

.....

.....

(ii) the kinetic energy **lost** during the collision expressed as a percentage of the initial kinetic energy. [3]

.....

.....

.....

.....

.....

.....

.....

Examiner only

(b) A red laser beam of power 1 mW and wavelength 633 nm is incident at an angle of 30° on a **perfectly reflecting** mirror.

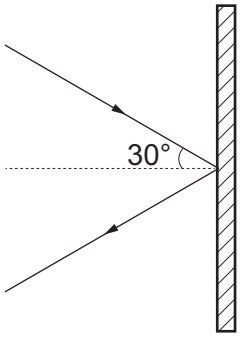

Determine:

(i) the energy of a single photon of this wavelength; [2]

(ii) the number of photons incident on the mirror per second; [2]

(iii) the component of the momentum of an individual incident photon perpendicular to the mirror; [1]

(iv) the force exerted by the photons on the mirror. [2]

© WJEC CBAC Ltd.

Examiner only

5. *(a)* The drum of a top-loading washing machine spins around a vertical axis. The drum has a radius of 0.25 m and spins at a rate of 1 200 revolutions per **minute**.

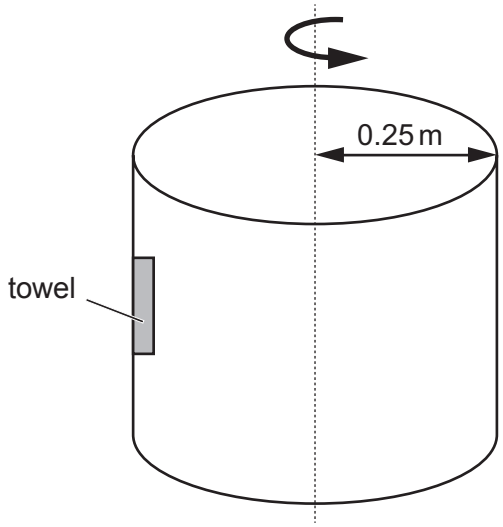

Determine the centripetal force on a damp towel, of mass 0.8 kg, on the inner wall of the drum. [4]

.....

.....

.....

.....

.....

.....

Examiner only

(b) The drum of a front-loading washing machine also has a radius of 0.25 m and spins at the same rate of 1 200 revolutions per minute.

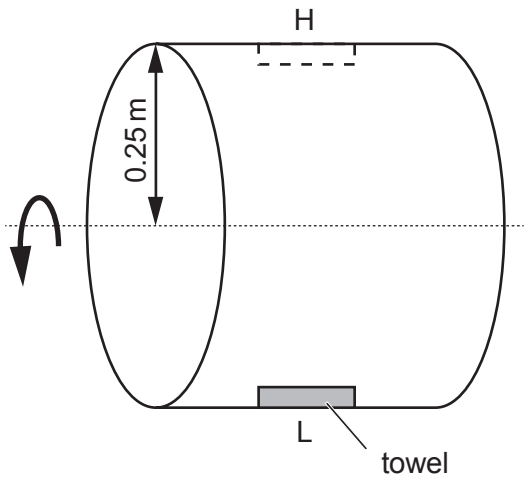

By considering the forces on the towel, determine the force exerted by the wall of the drum on the towel when the towel is at its:

(i) lowest point in the rotation (L); [2]

.....

.....

.....

.....

(ii) highest point in the rotation (H). [1]

.....

.....

.....

(c) As the drum spins, the lid of a nearby saucepan is heard to vibrate. The vibration reduces when the spinning rate decreases. Explain both of these effects. [2]

.....

.....

.....

.....

.....

© WJEC CBAC Ltd.

Examiner only

6. *(a)* The diagram shows an isolated electron. On the diagram, sketch and label:

(i) the electric field lines and direction (label as E);

(ii) the equipotential surfaces (label as V). [2]

(b) Determine the electric potential at a distance of 2.00 mm from the electron. [2]

.....

.....

.....

.....

(c) A second electron is located at a distance of 2.00 mm from the first electron shown above. Determine the work required to bring this second electron from this distance of 2.00 mm to a point 1.20 mm away from the first electron, where the potential is -1.20×10^{-6} V. [2]

.....

.....

.....

.....

© WJEC CBAC Ltd.

Examiner only

(d) Compare the magnitude **and** direction of the electrostatic forces that the electrons, separated by a distance of 1.20 mm, exert on each other with the gravitational forces that they exert at this separation. Support your answer with calculations. [3]

© WJEC CBAC Ltd.

Examiner only

7. The Moon has an orbital period of about 27.3 days. The mass of the Earth is 6.00×10^{24} kg and the mass of the Moon is 7.34×10^{22} kg.

(a) Show that the distance between the Moon and the Earth is approximately 385 000 km. [3]

(b) (i) Determine the distance of the centre of mass of the Earth-Moon system from the centre of the Earth. [2]

(ii) Comment on your answer to *(b)*(i) given that the radius of the Earth is approximately 6 370 km. [1]

Examiner only

(c) Calculate the distance, x, from the centre of the Earth along the Earth-Moon line to the point P where the net gravitational field strength due to the Earth and Moon is zero. [4]

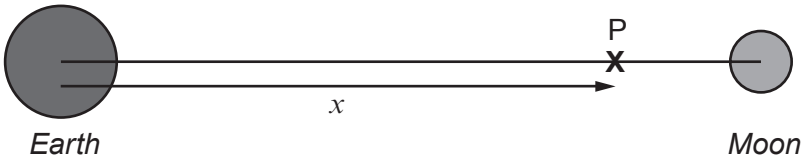

(not to scale)

END OF PAPER

© WJEC CBAC Ltd.